F118
In-Ceiling Media Air Cleaner

SPECIFICATION DATA

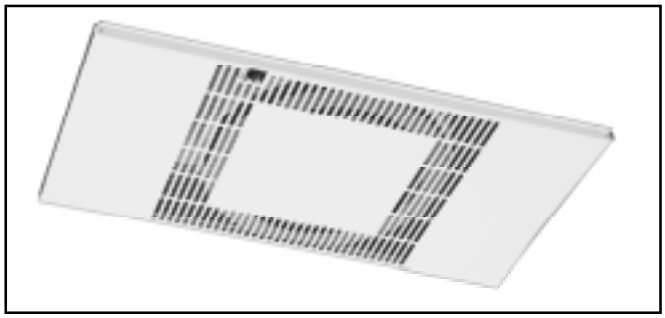

APPLICATION

The F118 media air cleaner uses a three-speed direct-drive forward-curve blower motor and a 95 percent D.O.P. particle filter to capture airborne particles such as dust, soot, and cooking smoke from the circulating air. When equipped with two CPZ™ modules, the air cleaner also adsorbs gases and odors from the air passing through it. The F118 is recommended for use in rooms with drop ceilings, and for spaces with structural ceilings not higher than 16 ft (4.8m), where there is a minimum one ft (0.3m) clearance between the drop ceiling and the structural ceiling.

The F118 media air cleaner uses the Coanda effect to circulate air through the space. This effect is the tendency of air to travel close to a wall contour when ejected from a jet. The air cleaner draws contaminated air up from the center of the room, forces it through the filters, and blows the filtered air out through both narrow ends of the air cleaner.

SPECIFICATIONS

IMPORTANT

The specifications given in this publication do not include normal manufacturing tolerances. This unit might not exactly match the listed specifications. Also, this product is tested and calibrated under closely controlled conditions, and some minor differences in performance can be expected if those conditions change.

Table 1. Air Volume

Air Volume	Cubic ft./Min.	Cubic Meters/Hr.	Current Draw	Sound level at 3.3 ft (1m)
High	425 cfm	723 m^3/hr	2.8A	65 dBA
Medium	300 cfm	510 m^3/hr	2.0A	54.5 dBA
Low	200 cfm	340 m^3/hr	1.4A	48 dBA

Color:
Galvanized steel cabinet and white cover.

Blower/Motor:
Three-speed direct-drive forward curve. Motor lubrication is not required.

FEATURES

- **D.O.P. particle filter is 95 percent efficient at 0.3 micron particles, and more efficient on both larger and smaller particles.**
- **CPZ™ modules can reduce space odors.**
- **Circulates air up to 425 ft^3/minute (723m^3/hour).**
- **Provides Coanda air distribution by drawing in dirty air, cleaning it, and bi-directionally recirculating the filtered air throughout the space.**
- **Designed to overcome the increase in air flow resistance normally caused by filter loading.**
- **White cover compliments ceiling color.**
- **Accessible three speed push-button switch.**
- **Optional wall-mounted remote switch.**
- **Easy to remove and replace filters.**

Ambient Temperature Rating:
Shipping and Storage: -20°F to +150°F (-29°C to +66°C).
Operating: This equipment is intended for use at ambient temperatures that usually are not higher than 77°F (25°C), but occasionally can be as high as 104°F (40°C) for brief periods of time. It functions in an environment of up to 95 percent relative humidity, non-condensing.

Electrical Ratings:
120V, 60 Hz.

Grille Type:
Perforated metal.

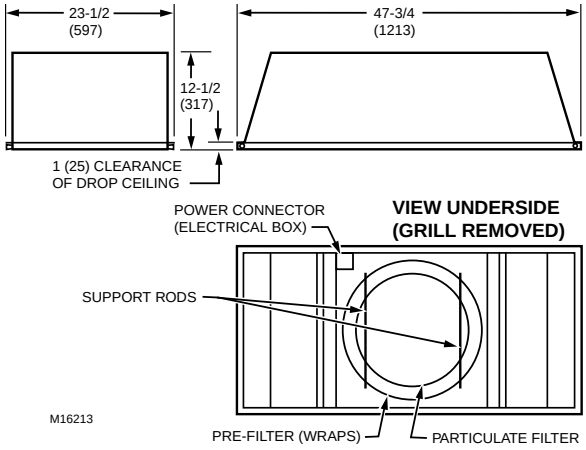

Fig. 1. Approximate dimensions of F118 in inches (mm).

Mounting:
Hangs freely from structural ceiling, or can be recessed into a frame in a drop ceiling.

® U.S. Registered Trademark
Copyright © 1999 Honeywell Inc. • All Rights Reserved

Weight:
Shipping (cabinet and contents): 119 lbs (54 kg).
Installation: 92 lbs (42kg).
CPZ™ Absorbent Module: 14 lbs (6 kg) each.

Operation at low and medium speeds usually falls within the range of “white noise.”

Approvals (Pending):
UL Listed.
CSA (Canadian Standards Association) Listed.

Table 2. Replacement parts list.

No.	Description	Pack Qty.	Order Number
1	CPZ™ sorbent module (2) — used only with D.O. P. Particle filters	1	32002271
2	D.O.P. Primary particle filter 95 percent (1)	1	32002272
3	Pre-filter (disposable)	1	32002590
4	Blower wheel (1)	1	32002269
5	Motor assembly (1)	1	32002587
6	Motor mount	1	32002589
7	Inlet cone (1)	1	32002286
8	Grille assembly, without hinges and latches (1)	1	32002266
9	3-speed switch	1	00190382
10	Spring loaded plunger (2)	2	32002278
11	Motor maintenance grommet set (1) Not illustrated	3	32000261
12	Optional speed switch, variable (1) Not illustrated	1	32000234

NOTE: Qty in (#) is required qty per unit.

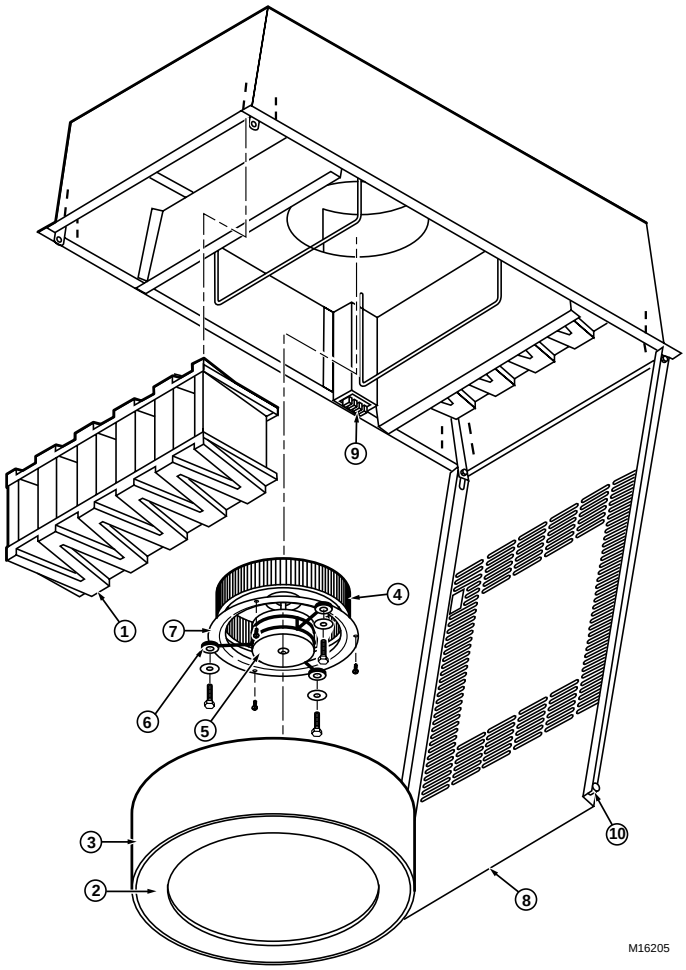

Fig. 9. F118 Air Cleaner components

Home and Building Control
Honeywell Inc.
Honeywell Plaza
P.O. Box 524
Minneapolis MN 55408-0524

Home and Building Control
Honeywell Limited-Honeywell Limitée
155 Gordon Baker Road
North York, Ontario
M2H 3N7

Honeywell Asia Pacific Inc.
Room 3213-3225
Sun Hung Kai Centre
No. 30 Harbour Road
Wanchai
Hong Kong

Honeywell Latin American Region
480 Sawgrass Corporate Parkway
Suite 200
Sunrise FL 33325

Honeywell Europe S.A.
3 Avenue du Bourget
1140 Brussels
Belgium

Honeywell

Printed in U.S.A. on recycled paper containing at least 10% post-consumer paper fibers.